MYRON ZUCKER

CAPACITRAP®

INSTALLATION AND OPERATIONS MANUAL

NOTE **Please read this entire installation and operations manual before energizing the CAPACITRAP®.**

Safety Considerations:

- Installing and servicing capacitor equipment can be hazardous. Only trained personnel should install and service power factor correction capacitors.
- Observe precautions in the literature, on tags, and on labels attached to the unit.
- Follow all safety codes such as Lock-out/Tag-out procedures, Arc Flash safety, etc.
- Wear required Personal Protective Equipment (PPE) such as safety glasses, work gloves, cotton clothing, etc. as required by local code and safety procedures.

Warnings and Cautions:

- Failure to read these instructions and failure to install the equipment per instructions may cause equipment damage and may void the warranty.
- Care should be taken in keeping the inside of enclosures clear of any debris, metalworking by-products or electrician's tools.
- It is recommended that incoming power be disconnected at the source before making any electrical or mechanical connections, changes or hands-on inspections.
- To de-energize capacitor cells, wait one minute after disconnecting the unit from the primary circuit to allow capacitor discharge resistors to reduce capacitor voltage to less than 50 volts (National Electrical Code, Article 460-6 requirement).

TABLE OF CONTENTS

1. PRE-INSTALLATION 1
1.1 Storage 1
1.2 Location 1

2. POWER SOURCE 2
2.1 Voltage 2
2.2 Conductor (Wire) Size 2
2.3 Disconnect Devices and Ratings 2
2.4 Connections to Power Source 2
2.5 Equipment Ground 2

3. REMOTE CONTROL 2

3. PREVENTATIVE MAINTENANCE PROCEDURES 4

4. OPERATION OF 3-PHASE MULTICELTEL 5

TABLES AND FIGURES

TABLE 1. Recommended Wire Sizes, Switches And Fuses 3

FIGURE 1. Connection to Power Source Diagram 2

1. PRE-INSTALLATION

Inspect the unit for any damage as soon as it is received. All risk of loss or damage in transit shall pass to the purchaser at the shipping point, regardless of freight payment.

- Check that all packages and/or crates have been delivered and that the equipment has not been damaged in transit.
- Forward any claims to the carrier immediately (most carriers impose a 24-hour time limit for the reporting of loss or damage).
- Damaged or missing items are the responsibility of the carrier and must be reported.
- Check that the information shown on the equipment nameplates corresponds with the order specifications.
- The packaging material should be replaced for protection until installation has begun.

1.1 Storage

If the unit cannot be placed into service reasonably soon after its receipt, it should be stored in a clean, dry and ventilated building free from temperature extremes. Acceptable storage temperatures are from 0°C (32°F) to 40°C (104°F).

- Store the equipment in a dry, ventilated location, sheltered from rain, water spray, splashes and chemicals.
- Stored equipment should be protected by a tarp or other cover providing effective protection against dust, dirt, paint, etc.

1.2 Location

Installation ambient temperatures are very important to achieve design life of equipment.

- Suggested location maximum ambient temperature is 40°C (104°F).
- Maximum capacitor operating ambient temperature shall be 46°C (115°F).
- For outdoor enclosures, care must be taken to keep unit from direct sunlight and other weather conditions.
- Spacing from walls shall be six (6) inches and twelve (12) inches from overheads. All other equipment, housings, cabinets or other obstructions shall be considered as walls or overheads.

2. POWER SOURCE

2.1 Voltage

Check the unit's nameplate to make certain that the voltage rating is suitable for operation at the supply (line) voltage. These units are capable of operation at a maximum of 110% of nameplate rated voltage (RMS, 50 or 60 Hz).

2.2 Conductor (Wire) Size

See **TABLE 1** on next page for recommended wire size.

2.3 Disconnect Devices and Ratings

Equipment shall be capable of being disconnected from power source with switch, fuse switch or circuit breaker. See **TABLE 1** for recommended current ratings.

2.4 Connections to Power Source

Equipment shall be connected to power source as shown in **FIGURE 1**.

FIGURE 1
CONNECTION TO POWER SOURCE DIAGRAM

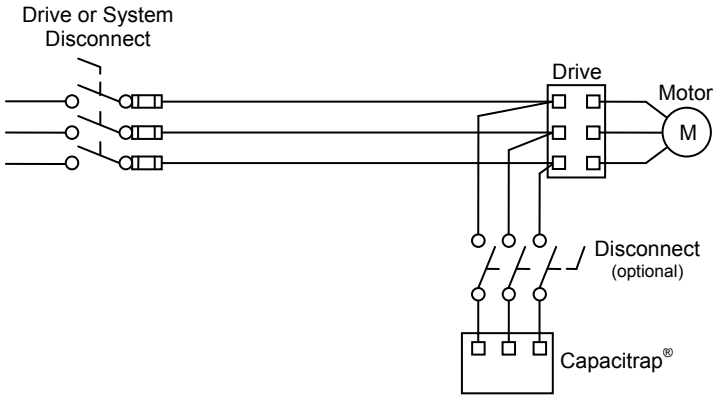

Connecting the Capacitrap® to the drive terminal and also adding a disconnect is the best way to connect your Capacitrap®. Not only do you keep harmonic currents from the drive cables, you also have a means to disconnect the Capacitrap® from the drive circuit. This will allow maintenance, if needed, to the Capacitrap® while keeping the motor system still online. This is particularly important if you cannot shut down your process any time you might want to – for example, in an injection molding operation.)

Power leads shall be straight and without kinks or loops. Lead length should be such that no strain is applied to the power lead connector. Power leads shall be firmly clamped in connectors by tightening connector bolts. Wire lead strands should not move in connector when the lead is moved from side to side by hand. Improper (loose) connections will cause terminal overheating and possible early failure of the capacitor cells.

2.5 Equipment Ground

All units are provided with ground connector lug(s) within the enclosure to facilitate grounding per National Electrical Code, Articles 460-10 & 250.

3. REMOTE CONTROL

The Capacitrap® is shipped with a terminal block. For remote control, remove jumper at terminals and install your isolated contact in its place to turn unit on and off. Refer to drawings for terminal location.

TABLE 1

RECOMMENDED WIRE SIZES, SWITCHES AND FUSES FOR 3-PHASE, 60Hz CAPACITORS

(These wire sizes are based on 135% of rated current in accordance with the National Electrical Code, Article 460.)

	240 VOLTS				480 VOLTS				600 VOLTS			
KVAR	Current* (Amps)	Wire Size 90°C-Type THHN XHHW* or Equiv. †	Fuse (Amps)	C.B. or Switch (Amps)	Current* (Amps)	Wire Size 90°C-Type THHN XHHW* or Equiv. †	Fuse (Amps)	C.B. or Switch (Amps)	Current* (Amps)	Wire Size 90°C-Type THHN XHHW* or Equiv. †	Fuse (Amps)	C.B. or Switch (Amps)
1	2.4	14	5	30	1.2	14	3	30	1.0	14	3	30
1.5	3.6	14	6	30	1.8	14	3	30	1.4	14	3	30
2	4.8	14	10	30	2.4	14	5	30	1.9	14	3	30
2.5	6	14	10	30	3	14	6	30	2.4	14	5	30
3	7.2	14	15	30	3.6	14	6	30	2.9	14	5	30
4	9.6	12	20	30	4.8	14	10	30	3.8	14	6	30
5	12	12	20	30	6	14	10	30	4.8	14	10	30
6	14.4	10	25	30	7.2	14	15	30	5.8	14	10	30
7.5	18	10	30	30	9	14	15	30	7.2	14	15	30
10	24	8	40	60	12	12	20	30	9.6	12	20	30
12.5	30	8	50	60	15	10	25	30	12	12	20	30
15	36	6	60	60	18	10	30	30	14.4	10	25	30
17.5	42	6	70	100	21	8	35	60	16.8	10	30	30
20	48	4	80	100	24	8	40	60	19.2	8	35	60
22.5	54	4	90	100	27	8	50	60	21.6	8	35	60
25	60	2	100	100	30	8	50	60	24	8	40	60
27.5	66	2	125	200	33	6	60	60	26.4	8	45	60
30	72	2	125	200	36	6	60	60	28.8	8	50	60
32.5	78	1/0	150	200	39	6	65	100	31.2	8	50	60
35	84	1/0	150	200	42	6	70	100	33.6	6	60	60
37.5	90	1/0	150	200	45	6	75	100	36	6	60	60
40	96	2/0	175	200	48	4	80	100	38.4	6	65	100
42.5	102	2/0	175	200	51	4	90	100	40.8	6	70	100
45	108	3/0	200	200	54	4	90	100	43.2	6	75	100
50	120	3/0	200	200	60	2	100	100	48	4	80	100
52.5	126	3/0	200	200	63	2	110	200	50.4	4	80	100
55	132	4/0	250	400	66	2	125	200	52.8	4	90	100
60	144	4/0	250	400	72	2	125	200	57.6	2	100	100
65	156	4/0	250	400	78	1/0	150	200	62.4	2	110	200
70	168	300M	300	400	84	1/0	150	200	67.2	2	125	200
75	180	300M	300	400	90	1/0	150	200	72	2	125	200
80	192	350M	350	400	96	2/0	175	200	76.8	1/0	150	200
90	216	500M	400	400	108	3/0	200	200	86.4	1/0	150	200
100	240	500M	400	400	120	3/0	200	200	96	2/0	175	200
125	300	(2)4/0	500	600	150	4/0	250	400	120	3/0	200	200
150	360	(2)300M	600	600	180	300M	300	400	144	4/0	250	400
200	480	(2)500M	800	800	240	500M	400	400	192	350M	350	400
225	540	(3)300M	900	1200	270	(2)4/0	500	600	216	500M	400	400
250	600	(3)350M	1000	1200	300	(2)4/0	500	600	240	500M	400	400
300	720	(3)500M	1200	1200	360	(2)300M	600	600	288	(2)4/0	500	600
350					420	(2)350M	700	800	336	(2)300M	600	600
400					480	(2)500M	800	800	384	(2)350M	700	800
450					540	(3)300M	900	1200	432	(2)400M	750	800
500					600	(3)350M	1000	1200	480	(2)500M	800	800
550					660	(3)500M	1100	1200	528	(3)300M	900	1200
600					720	(3)500M	1200	1200	576	(3)350M	1000	1200

* Rated current based on operation at rated voltage, frequency, and KVAR.

†Consult National Electrical Code for other wire types. Above size based on 35°C Ambient Operation. (Refer to NEC table 310-16)

Note: Fuses furnished within Capacitor Assembly may be rated at higher value than shown in this table. The table is correct for field installations and reflects the manufacture's suggested rating for overcurrent protection and disconnect means in compliance with the National Electrical Code.

5. PREVENTATIVE MAINTENANCE PROCEDURES

WIRE CONNECTIONS
All power wire connections should be inspected for tightness one (1) month after commissioning and every six (6) months thereafter.

CAPACITOR CELLS
Capacitor cells should be visually checked for distorted tops one (1) month after commissioning and every six (6) months thereafter.

INDICATION LIGHTS
Blown fuse indication lights may be checked daily.

CLEANLINESS
Every six (6) months the fan filters should be inspected and cleaned or replaced and the unit should be clean of all contaminants. Note: DO NOT USE HIGH PRESSURE LIQUID TO CLEAN UNITS.

CONTACTORS
Remove covers and visually check contacts for signs of wear and excessive arcing every six (6) months. Energize each contactor with the controller in "manual" mode to ensure proper operation.

How to Check Fuses:

Trouble: Fuse light is illuminated.
- This indicates that a fuse is blown. Typically, power surges or a bad capacitor causes a fuse to blow.
- **Disconnect power** from the capacitor unit and wait one minute after the power has been disconnected to allow the capacitors to discharge.
- Check affected capacitor following steps below: *How to Test a Capacitor Cell*.
- Replace affected fuse.

How to Test a Capacitor Cell:

With a Capacitance Meter
Capacitor cells are rated in microfarad and voltage. The easiest way to test a cell is to measure the microfarads with a capacitance meter.
- **Disconnect power** from the capacitor unit and wait one minute after the power has been disconnected to allow the capacitors to discharge.
- Measure microfarads using a capacitance meter. The microfarads should be equal to the microfarad rating or up to 5% over the rating.
- If microfarads are below the minimum, the cell is going bad.
- Replace bad capacitor cells.

Visual Inspection of Cell
If a capacitor meter is not readily available, the status of a cell can sometimes be determined visually.
- If the cell can is "bulged out" or "pouched up" on the top, it is definitely bad.
- **Disconnect power** from the capacitor unit and wait one minute after the power has been disconnected to allow the capacitors to discharge.
- Replace bad capacitor cells.

6. OPERATION OF 3-PHASE MULTICELTEL

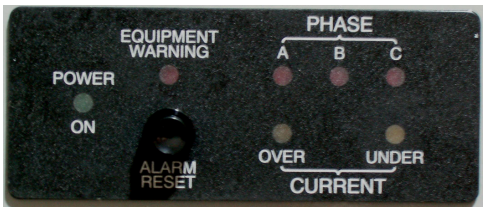

The 3-Phase MultiCelTel (MCT) is a patented Myron Zucker, Inc. product which provides additional monitoring of the capacitor cells within the Capacitrap® and is factory installed and calibrated on the "I" series products.

Operation:
When power is supplied to the Capacitrap®, the MCT will go through the following power-up procedure.

> If the power supply is working correctly, the POWER indicator will illuminate and the EQUIPMENT WARNING indicator will turn on briefly.
>
> EQUIPMENT WARNING indicator will turn off and the PHASE and CURRENT indicators will illuminate for half-a-second to self-test the display.
>
> Note: If the EQUIPMENT WARNING indicator flashes once per second, the MCT is defective and should be replaced. This occurs if the MCT detects a malfunction during its self-diagnostics, or if the micro-controller fails to operate.

The MCT has been programmed with a 2-minute power delay to allow the Capacitrap® to energize. During this time the relay is disabled and all inputs are ignored. After the 2-minute power delay, the normal mode of operation is initiated, the phases are monitored and the relay is enabled.

Note: This 2-minute power delay will occur anytime the power to the system is cycled or when the reset switch is activated after a fault occurs.

MCT Monitoring Features:

<u>Phases Out of Range</u>
If an out-of-range condition is detected and remains for more than 32 seconds (alarm delay period), the indicator for the PHASE out-of-range is illuminated.

- If the current is less than 8 amps of the other two phases, the UNDER current indicator is illuminated.
- If the current is greater than 8 amps of the other two phases, the OVER current indicator will illuminate.

If more than one phase is out of range, only the indicators for the phases out-of-range will be illuminated. The OVER and UNDER current indicators will NOT Illuminate.

Phase Imbalance
If an imbalance condition is detected and remains for more than 32 seconds (alarm delay period), and indicator is illuminated.

- If one phase is greater than 16 amps of the other two phases, the indicator for that PHASE is illuminated along with the OVER current indicator.
- If one phase is less than 16 amps of the other two phases, the indicator for that PHASE is illuminated along with the UNDER current indicator.
- If the difference between the highest and lowest phase is at least 16 amps, but the remaining phase is within 16 amps of the highest and lowest, then it is not possible to determine which phase is over- or under-current. In this circumstance, both the OVER and UNDER current indicators will illuminate but none of the phase indicators will illuminate.

MCT Monitoring Conditions:

- One of the PHASE indicators is illuminated and either the UNDER or OVER current indicator is illuminated.
  CAUSE: The indicated phase was either out-of-balance or out-of-range. The under-current or over-current indicator identifies the relationship between the faulty phase and the other two phases.

- Any combination of PHASE indicators is illuminated, but no under-current or over-current indicator is illuminated.
  CAUSE: The indicated phase or phases were out-of-range. It was not possible to determine whether the current was over or under the acceptable range.

- UNDER current and OVER current illuminated, but no phase indicators illuminated.
  CAUSE: A phase imbalance condition occurred where the difference between the highest and lowest phases were greater than 16 amps, but the remaining phase was close enough to the other two phases to be considered in balance. It was not possible to determine which phase was at fault.

- EQUIPMENT WARNING indicator is flashing.
  CAUSE: The MCT has found a problem with its operation and has shut itself down. In this condition the MCT is not monitoring the system and should be checked for trouble.

When an alarm condition exists, the system relay will be and will remain disabled until either power is cycled or the reset switch is pressed. Pressing the reset switch any other time does not affect the unit.

If either an out-of-range or out-of-balance condition occurs but returns to a normal condition before the alarm delay period expires (32 seconds), the fault condition will be cleared and the alarm delay will be reset.

MYRON ZUCKER, INC.
36825 METRO COURT
STERLING HEIGHTS, MI 48312-1013
www.myronzucker.com
(800) 245-0583
P: (586) 979-9955
F: (586) 979-9484

©2009 Myron Zucker, Inc., All Rights Reserved