APPLICATIONS
- Branch panel
- Main service entrance

STANDARD FEATURES
- UL & C-UL listed, CE
- 2-year warranty
- 3-line fusing with blown fuse indication
- Discharge resistors per NEC requirements
- Assembled in the USA

STANDARD RATINGS
- 240, 480, 600 Volts
- 3-phase
- 60 Hertz

CAPACITOR CELLS
- 20-year rated life
- 5-year warranty
- Self-contained, 3-phase, delta-connected
- Industrial grade dry-type construction
- Losses of less than ½ watt per KVAR
- Self-healing metallized polypropylene dielectric film
- 3-phase pressure-actuated interrupter
- Hermetically sealed steel case
- Threaded insulated terminals

FUSES
- Fast-acting, current-limiting, with 200,000 ampere interrupting capacity

ENCLOSURES
- Built to NEMA 12 specifications for indoor use
- Wall-mounted or free-standing with hinged door and lockable door handle

FIELD WIRING TERMINATION
- Mechanical connections are provided for all field wiring termination points

TWO MODELS AVAILABLE
- CIM Model: blown fuse indication and CelTel® monitoring system
- CNM Model: blown fuse indication

LOSS-OF-CAPACITANCE INDICATION
- Patented CelTel® brand monitoring system
- Indicates when capacitor assembly is no longer functioning effectively
- Phase imbalance indication
- Overcurrent and undercurrent indication
- Reset function
- Self-diagnostic function

CIM Model

OPTIONS
- Circuit breaker or disconnect switch
- Other enclosure ratings available
- Other voltages and frequencies available
- Installation and start-up services
- Equipment financing

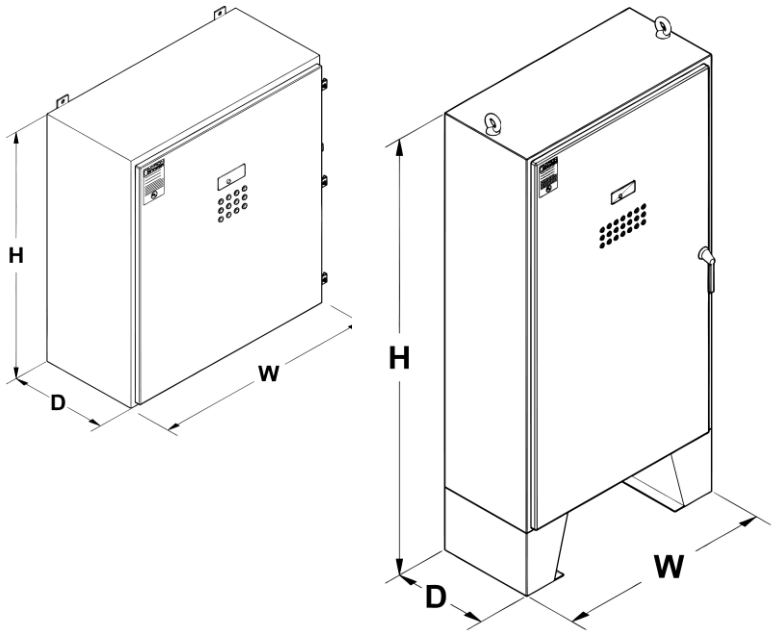

CASE DIMENSIONS			
CASE	H	W	D
W2	36.00	24.00	16.00
W4	36.00	36.00	16.00
F1	84.00	41.00	18.00
W2, W4: Wall-mounted; F1: Free-standing			

All dimensions are in inches. We reserve the right to change dimensions without notice.

SELECTION CHART

240V / 3Ø / 60HZ				480V / 3Ø / 60HZ				600V / 3Ø / 60HZ			
KVAR	PART NUMBER	AMPS*	CASE	KVAR	PART NUMBER	AMPS*	CASE	KVAR	PART NUMBER	AMPS*	CASE
75	C_M23075-3	180	W2	150	C_M43150-3	180	W2	150	C_M63150-3	144	W2
100	C_M23100-3	240	W2	175	C_M43175-3	210	W2	175	C_M63175-3	168	W2
125	C_M23125-3	300	W4	200	C_M43200-3	240	W2	200	C_M63200-3	192	W2
150	C_M23150-3	360	W4	225	C_M43225-3	270	W2	225	C_M63225-3	216	W2
175	C_M23175-3	420	F1	250	C_M43250-3	300	W4	250	C_M63250-3	240	W4
200	C_M23200-3	480	F1	300	C_M43300-3	360	W4	300	C_M63300-3	288	W4
225	C_M23225-3	540	F1	350	C_M43350-3	420	W4	350	C_M63350-3	336	W4
300	C_M23300-3	600	F1	400	C_M43400-3	480	F1	400	C_M63400-3	384	F1
				450	C_M43450-3	540	F1	450	C_M63450-3	432	F1
				500	C_M43500-3	600	F1	500	C_M63500-3	480	F1
				550	C_M43550-3	660	F1	550	C_M63550-3	528	F1
				600	C_M43600-3	720	F1	600	C_M63600-3	576	F1

* The ampacity of capacitor circuit conductors shall not be less than 135% of the rated current of the capacitor (Per NEC).
CIM: Blown fuse and loss-of-capacitance indication; CNM: blown fuse indication