MYRON **ZUCKER** INC.

POWER FACTOR CORRECTION & HARMONIC FILTER QUESTIONNAIRE

Thank you for taking the time to fill out this "Power Factor Correction & Harmonic Filter Questionnaire." The purpose of this questionnaire is to acquire data that will help Myron Zucker, Inc. help you. With this data, we can determine the amount of power factor correction capacitors and/or the amount of harmonic filtering required for your facility. It will also help us to determine where this equipment should be connected to your power system.

Please complete each item <u>to the best of your ability</u>. If some of the information requested is not available, please submit the questionnaire as complete as possible, and we will contact you to discuss your specific application. Please fill out one questionnaire for each substation transformer, that is, each medium-to-low voltage transformer (e.g., 13,200/480 volt transformer). If your equipment list will not fit in the space provided, please attach a separate sheet of paper. Again, thank you for your time.

NAME _____

TITLE/JOB FUNCTION _____

COMPANY _____

ADDRESS _____

_____

CITY _____

STATE _____ **ZIP** _____

TELEPHONE NO. _____

FAX NO. _____ **PAGER NO.** _____

E-MAIL ADDRESS _____

DATE QUESTIONNAIRE COMPLETED _____

* *

PLEASE RETURN THIS QUESTIONNAIRE TO:

A. SERVICE ENTRANCE DATA

A. 1. KVA of transformer: _____ KVA

A. 2. Transformer secondary voltage: _____ V_{RMS}

*A. 3. Transformer (%) impedance: _____ %

*A. 4. Transformer SC capacity (short circuit): _____ KVA

A. 5. Power usage:

(Please include copies of electric utility bills for the previous 12 months. Most of the information requested below can be determined from copies of the electric utility bills, but please enter whatever information is available.)

*a. Maximum kilowatt demand: _____ KW

*b. Maximum kilovolt ampere demand: _____ KVA

*c. Reactive kilovolt ampere demand: _____ KVAR

*d. Minimum present power factor: _____0. _____

e. Minimum power factor limit by utility: _____0. _____

(If not known, please request rate structure from your electric utility.)

A. 6. Are there any high-voltage capacitors on the primary side of the transformer?

☐ Yes ☐ No

If Yes, Rated KVAR: _____ KVAR

If Yes, Rated Voltage: _____ V_{RMS}

A. 7. Are there any capacitors on the secondary side of the transformer?

☐ Yes ☐ No

If Yes, Rated KVAR: _____ KVAR (total)

B. PLANT LOAD DATA

B. 1. List all standard motors (larger than 25 HP).

Location and/or equipment name	HP	RPM

* Not mandatory initially.

B. 2. List all Adjustable Speed Drives (larger than 10 HP or 10 KW).

Location and/or equipment name	HP or KW	Pulse

B. 3. Total HP or KW of drives to be installed in the next 12 months: _____ HP / KW

B. 4. List other nonlinear loads (e.g., UPS, battery charges, plating rectifiers, ARC furnaces, etc.):

Location and/or equipment name	KW or KVA

B. 5. List any power factor capacitors on the plant equipment.

Location and/or equipment name	KVAR	Voltage

B. 6. Please submit one-line electrical system diagram.
(See the example provided on the following page.)

B. 6.
(continued)

EXAMPLE

ONE-LINE ELECTRICAL SYSTEM DIAGRAM

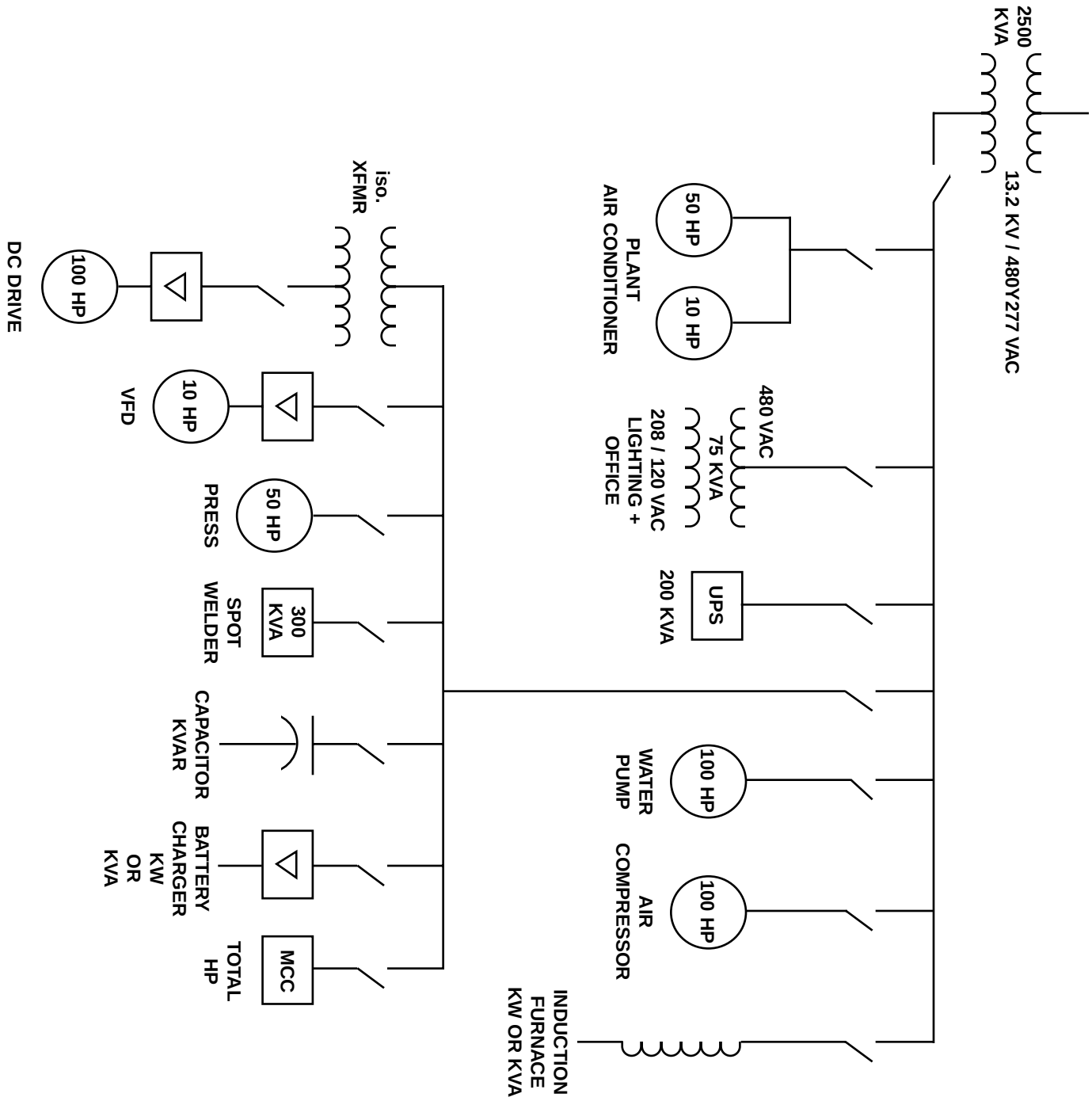

MYRON **ZUCKER** INC.

36825 Metro Court
Sterling Heights, MI 48312-1013
www.myronzucker.com

Phone: (586) 979-9955
(800) 245-0583
Fax: (586) 979-9484